SARO TECH

Innovative ideas,
inspired living

Interior

Installation Guide: SPC Flooring

Tools & Materials

The diagrams and instructions described in this guide are for illustrative purposes only. They are based on our recommendation, and a professional should be consulted prior to installation if something different from what is shown is required, as this guide is not intended to replace professional advice.

The consumer assumes all risks and responsibilities associated with the construction and use of this product.

Material damaged during installation is not covered under the warranties of SARO TECH US and/or its subsidiaries, parent companies, related parties, and/or affiliates.

Tape Measure

Metal Carpenters Square

Cutting Tool

Pencil

Rubber Mallet

Mounting adhesive

Protective Gloves (Optional)

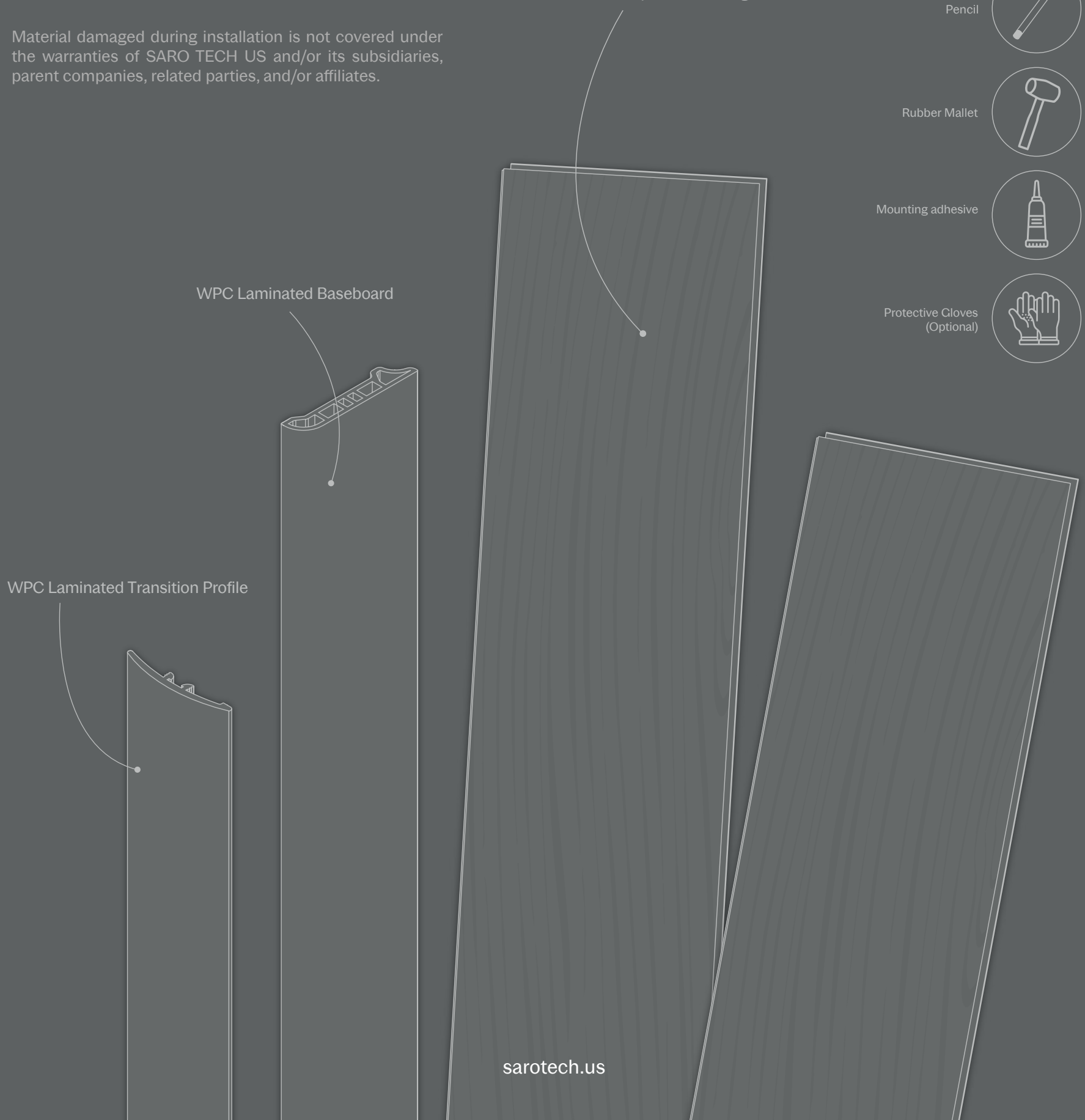

1. MEASURE THE WORK AREA

With the help of a tape measure or the tool of your choice, measure the length and width of the space where the stone plastic composite flooring will be installed. Based on the square meters you need to cover, calculate the number of boxes required.

Remember that 1 box of stone plastic composite flooring contains 10 pieces and covers approximately 24 square feet of surface area

Tools

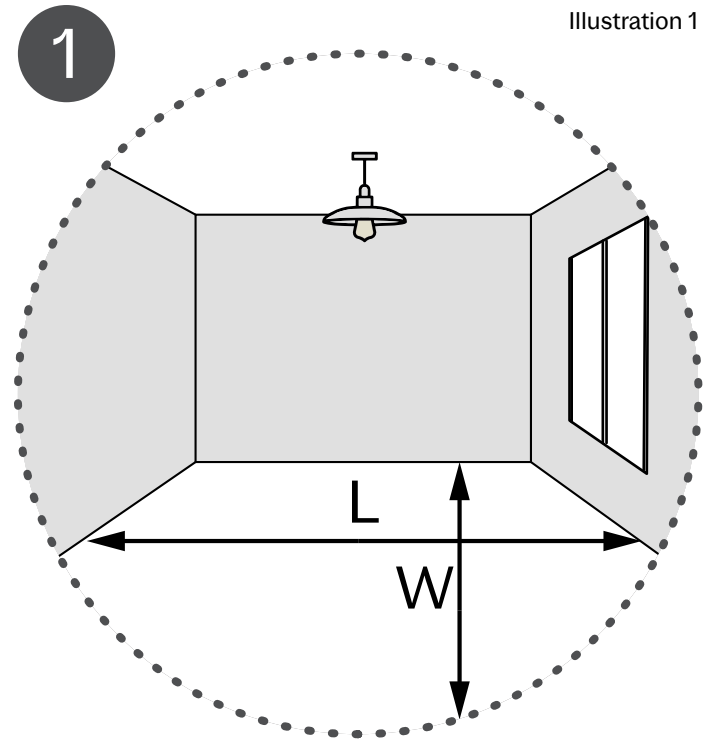

Illustration 1

IMPORTANT
2. ACCLIMATE THE MATERIAL

Leave the material out of its box for at least 48 hours prior to installation, inside the space where it will be installed.

Make sure that the area where the flooring will be installed does not exceed 3% moisture.

If the material is NOT acclimated, it should be understood that it will not have the required natural expansion, and during installation it may pop up and cause damage to the clip-lock system tabs. Damage of this kind is not covered by the product warranty.

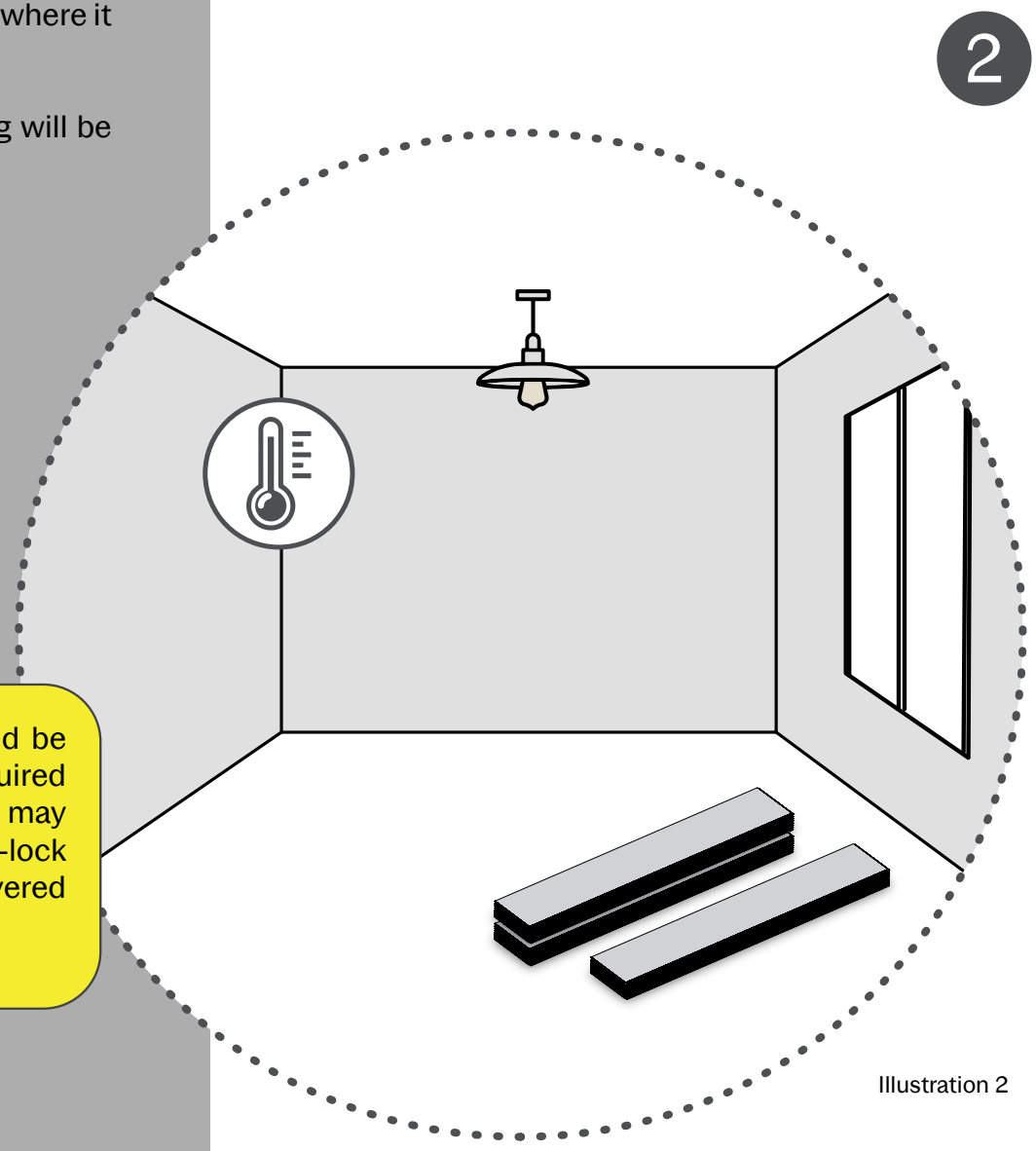

Illustration 2

3

Illustration 3

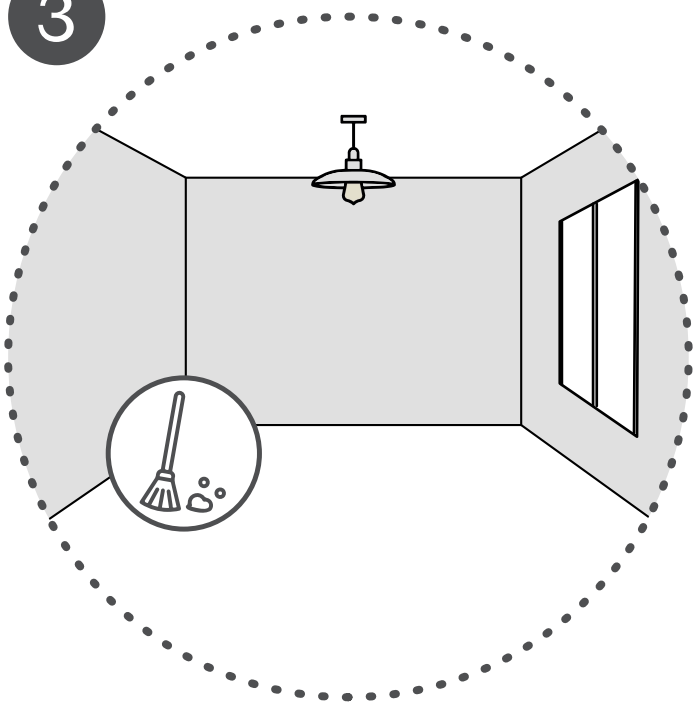

3. PREPARE THE WORK AREA

Check that your work area is flat, level, stable, and free of debris that could interfere with the proper installation of the material.

ASSEMBLY LINES
Stone Plastic Composite Flooring

Illustration 4

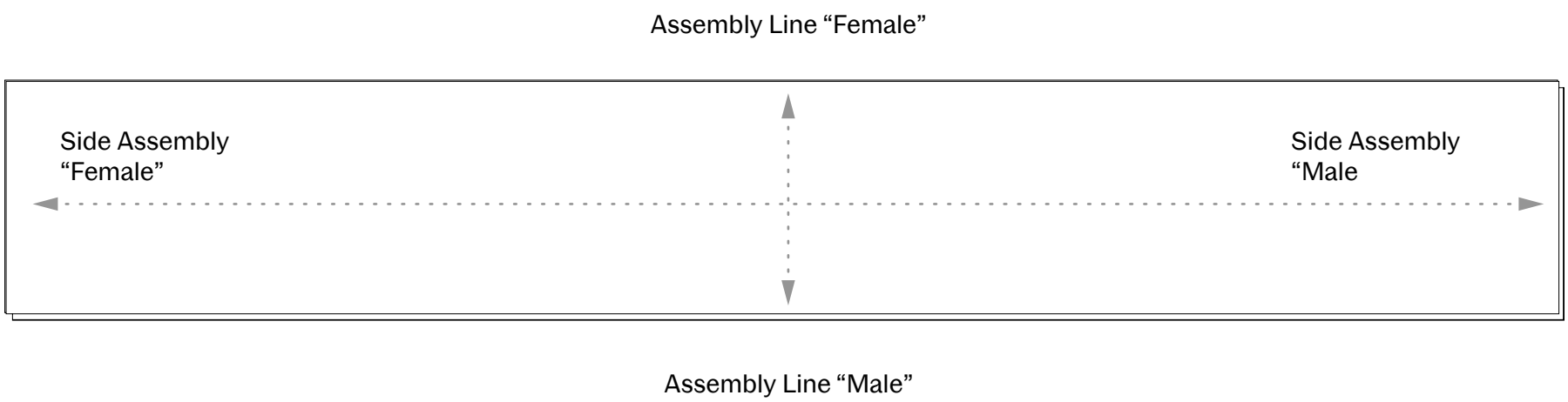

RECOMMENDATIONS FOR PROPER INSTALLATION

Install the stone plastic composite flooring in the direction of the light.

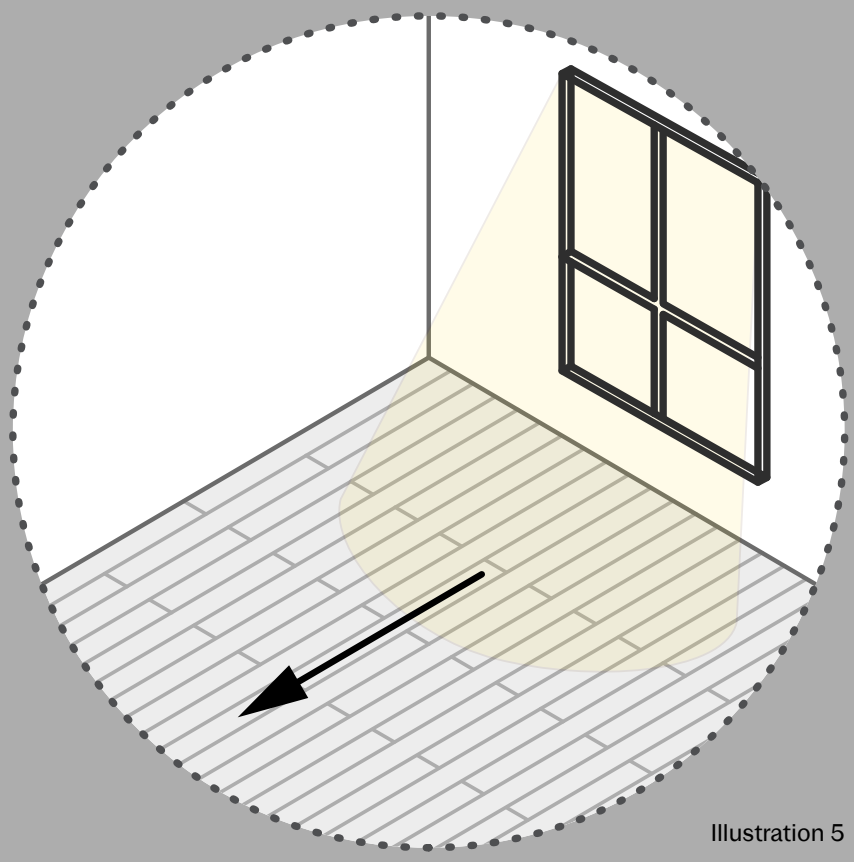

Illustration 5

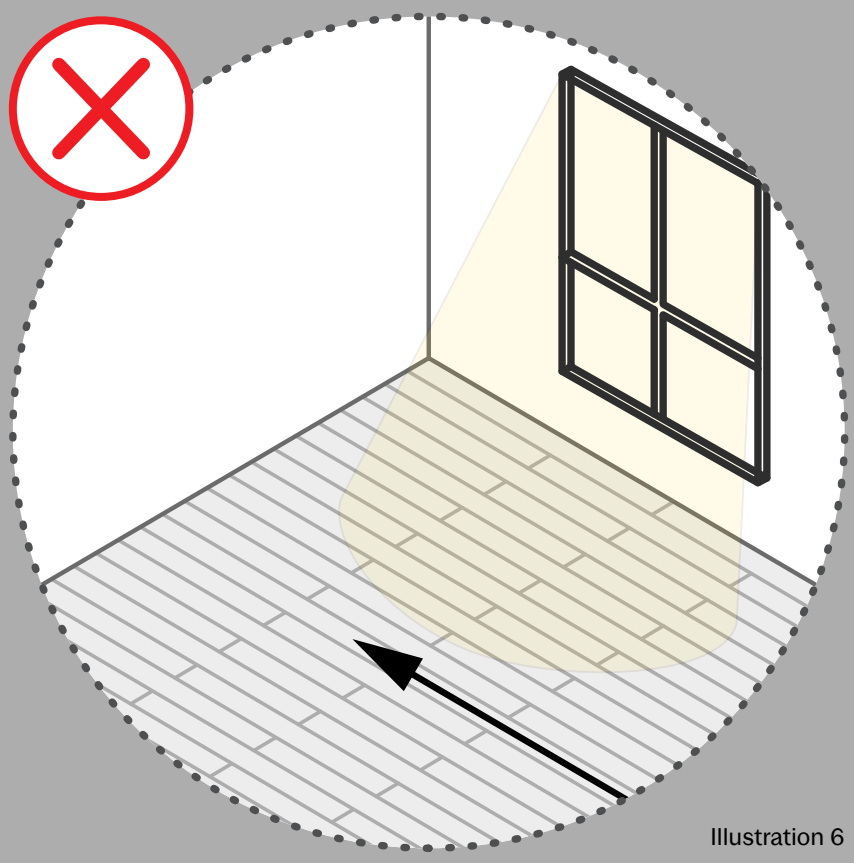

Illustration 6

TYPES OF INSTALLATION

Illustration 7

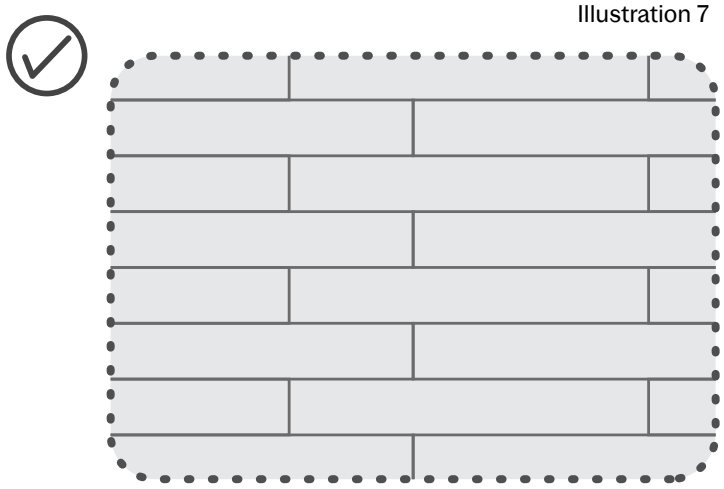

Illustration 8

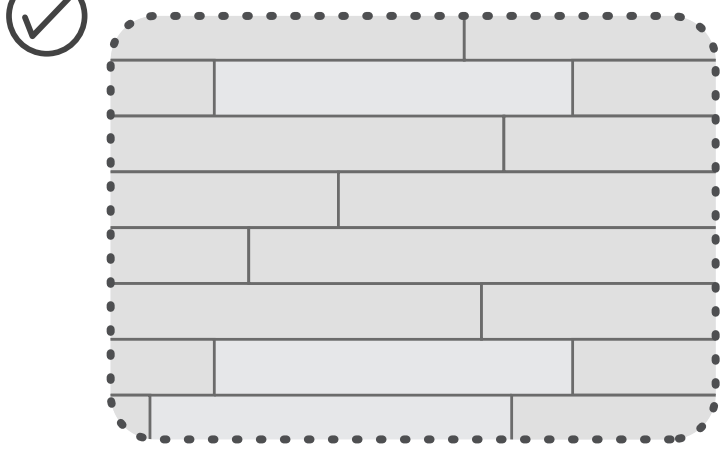

Illustration 9

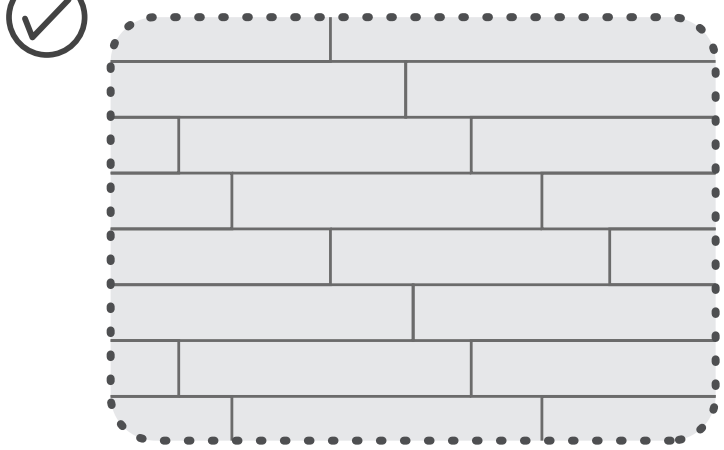

Illustration 10

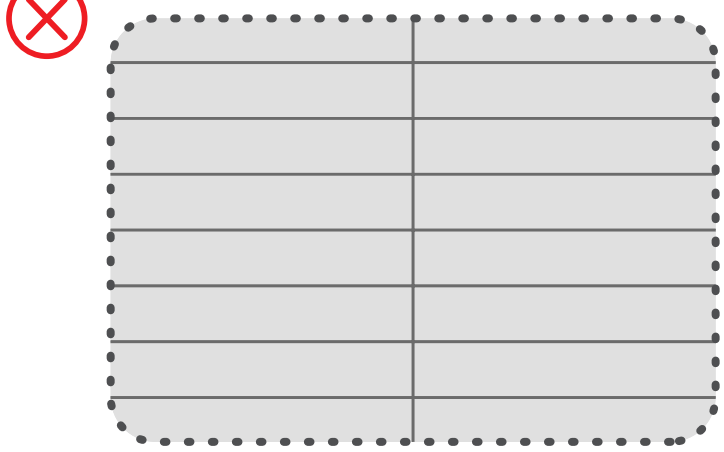

11

Illustration 11

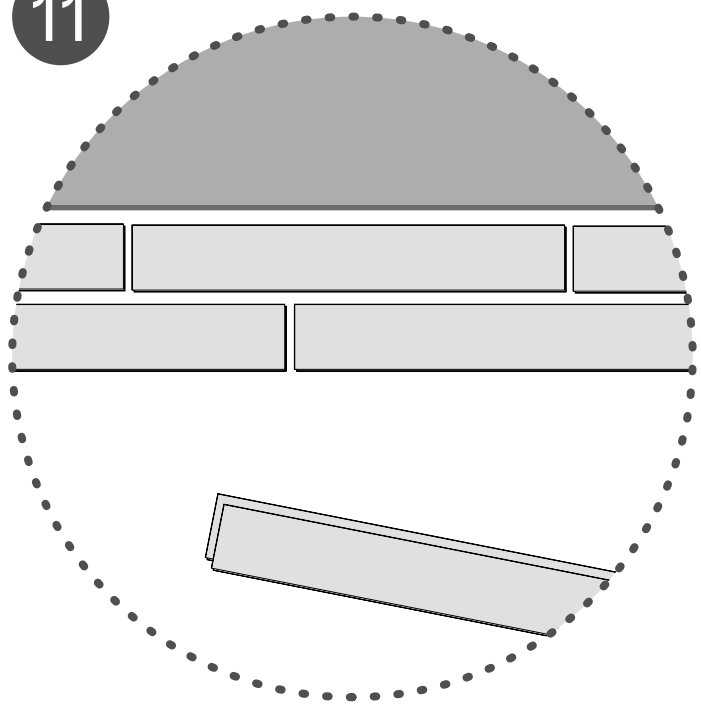

12

Illustration 12

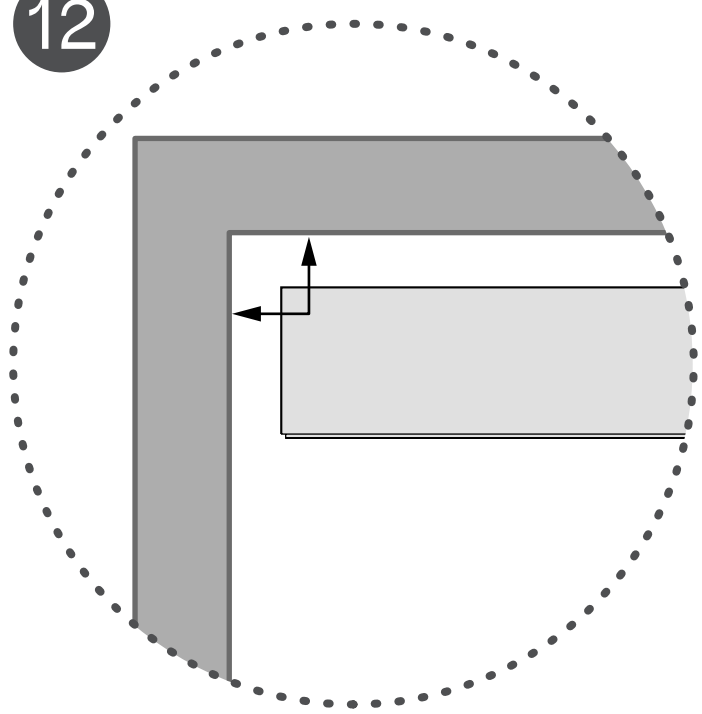

13

Illustration 13

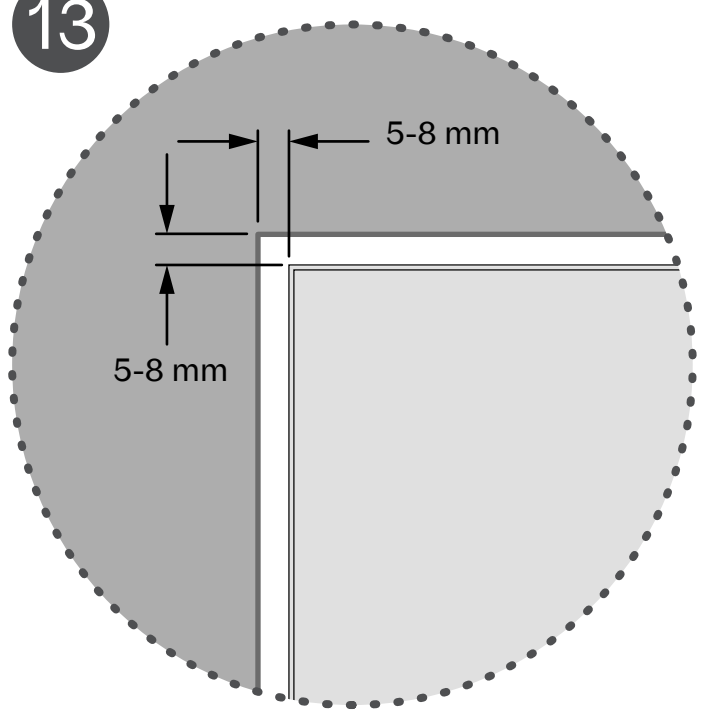

4. LAY OUT THE DESIGN OF THE PIECES

Begin by laying out the pieces to define and visualize the direction the flooring will take.

Refer to illustrations 7, 8, and 9 for the different installation types. Choose the design that best fits your needs and preferences.

5. INSTALL THE FIRST PIECE

First Row

Position the first piece with the female locking edge facing the wall and the female side lock placed in the corner of the installation area (Illustration 12).

Use illustration 4 to identify each of the assembly edges.

Be sure to leave a gap of 5 mm to 8 mm as an expansion allowance between the wall and the piece to prevent the pieces from lifting if the material expands (Illustration 13).

You may use another piece or spacers with a thickness equivalent to the stone plastic composite flooring to help maintain the gap (Illustrations 14 & 15).

6. INSTALL THE SECOND PIECE

Position the female side lock toward the male side lock of the first piece to secure them together (Illustration 16).

Remember to use the pieces as spacers to leave a 5–8 mm expansion gap between the wall and the piece.

You can refer to illustration 4 to identify each of the assembly edges.

14

Illustration 14

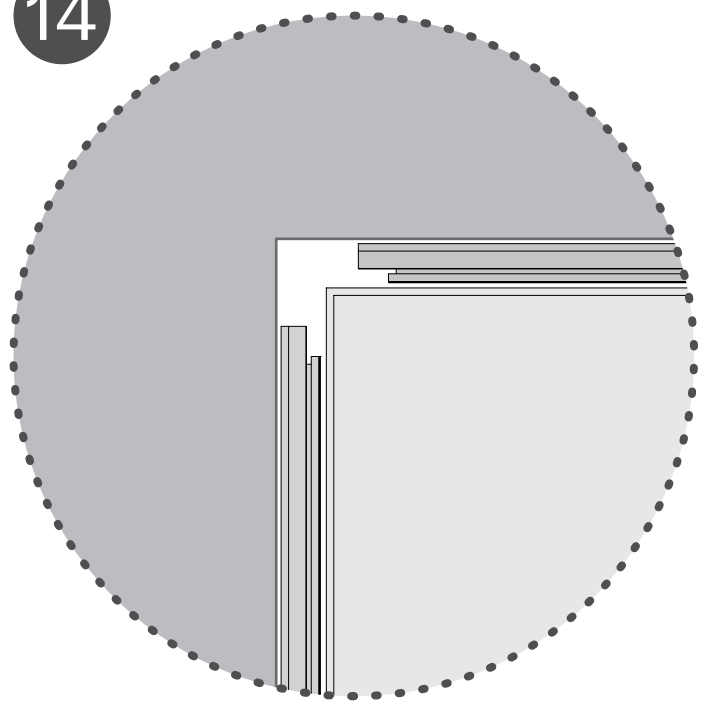

15

Illustration 15

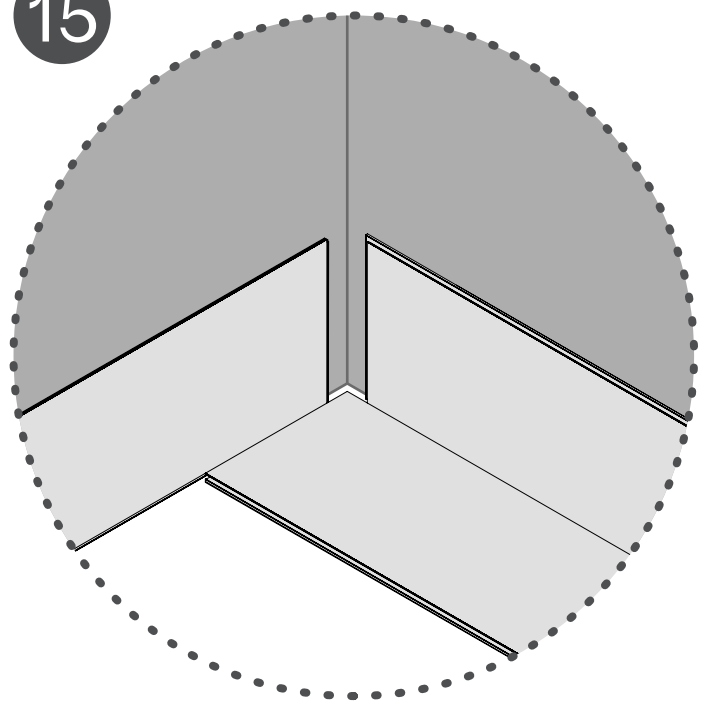

16

Illustration 16

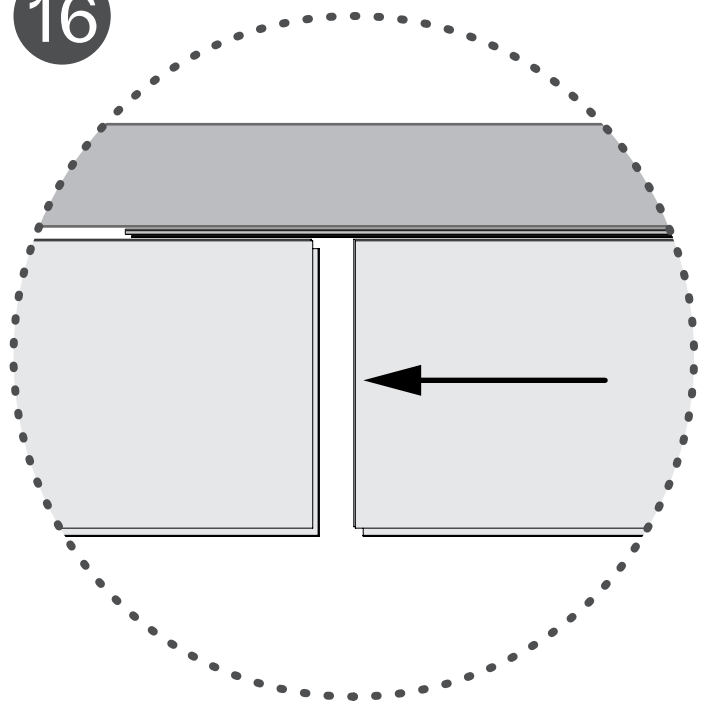

17

Illustration 17

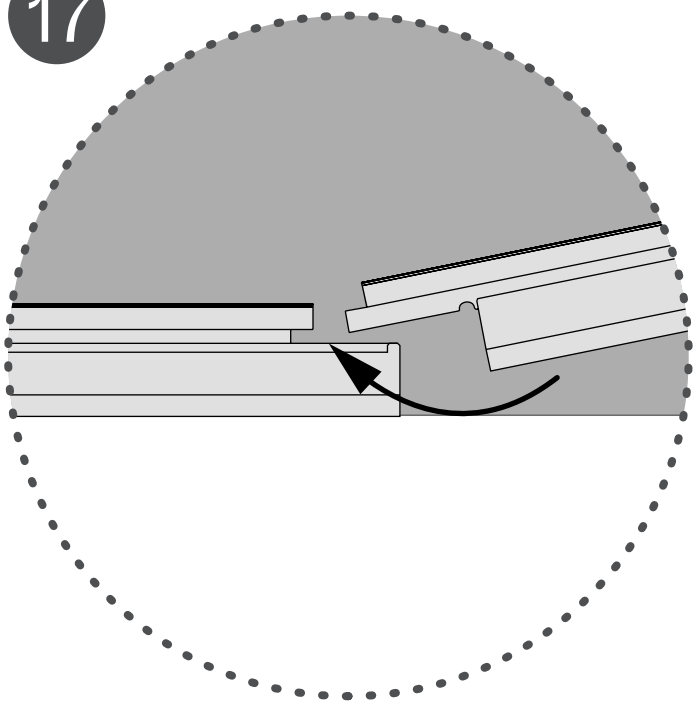

18

Illustration 18

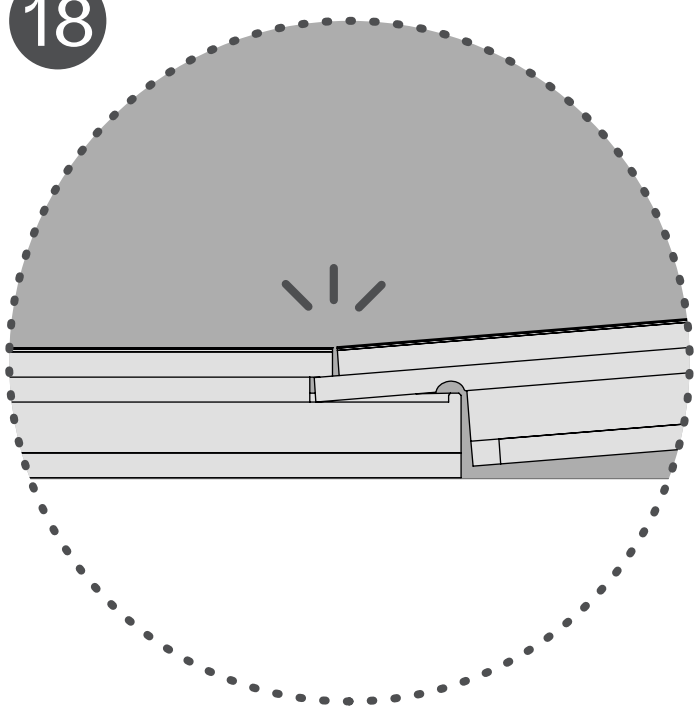

19

Illustration 19

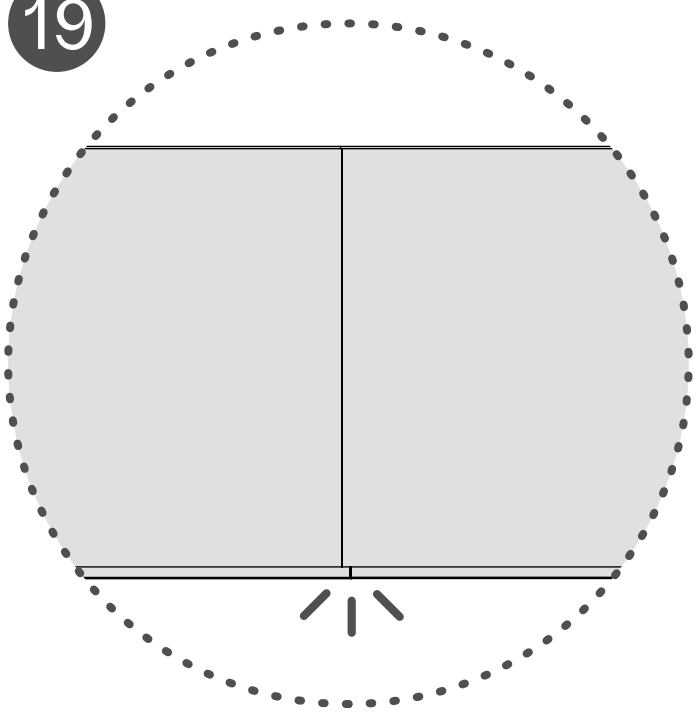

Using the clip system, snap the female side lock into the clip of the male side lock on the first piece previously installed (Illustrations 17 & 18).

To ensure the clips are properly locked, you may lightly tap the joints with a rubber mallet.

Tools

7. INSTALL CONSECUTIVE PIECES

According to your chosen design, continue installing the pieces in the row by repeating Step 6 until you reach the second-to-last piece.

To ensure the clips are properly locked, lightly tap the joints with a rubber mallet.

Tools

8. LAST PIECE IN THE ROW

Measure and adjust the material

Using a tape measure or a tool of your choice, measure the length required for the last piece to be installed.

9. Using a pencil and a square, mark a line to serve as a guide for making the cut (Illustrations 21 & 22).

Tools

To make the cut correctly, the female side lock should be considered the starting point when measuring the length of the piece (Illustrations 21 & 22).

Recommended Cutting Tools:
- Exacto / Cutter
- Laminate Flooring Cutter

Cutting Tools Not Recommended:
- Hand saw
- Hacksaw

Use Illustration 4 to identify each of the assembly edges.

Tools

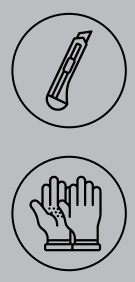

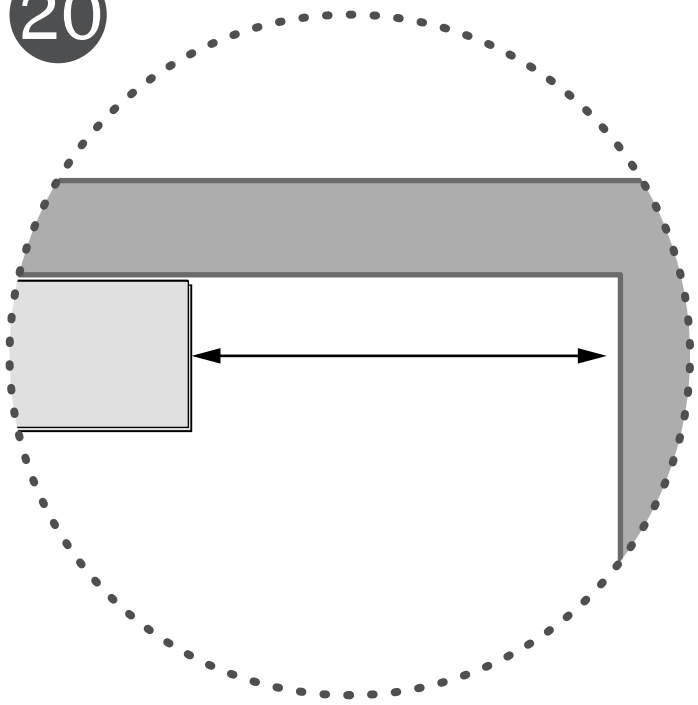

Illustration 20

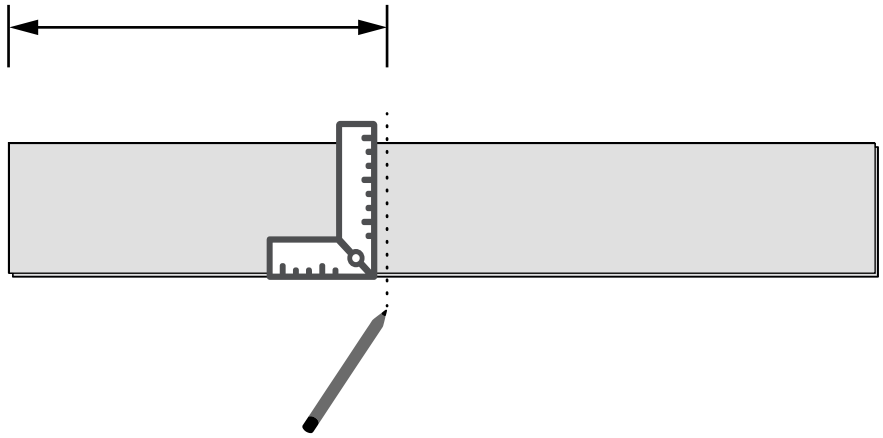

Illustration 21

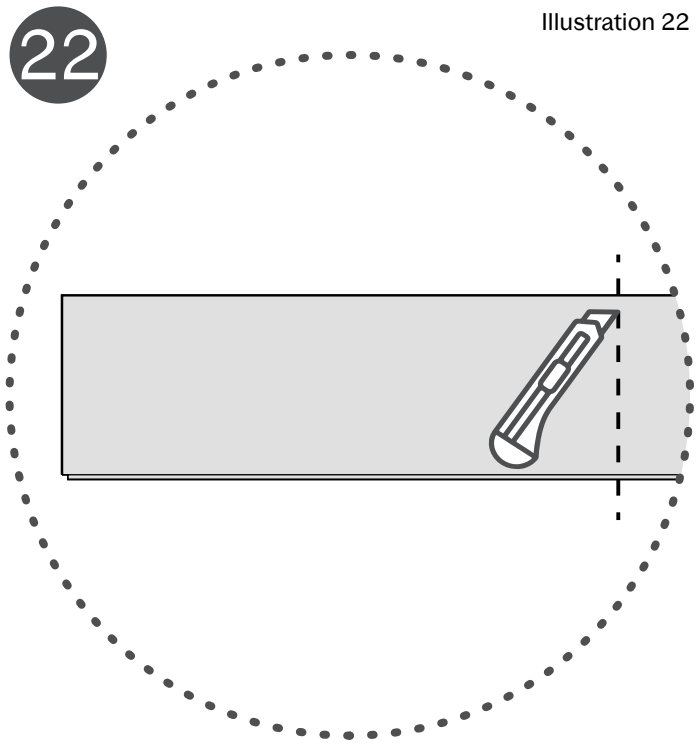

Illustration 22

23

Illustration 23

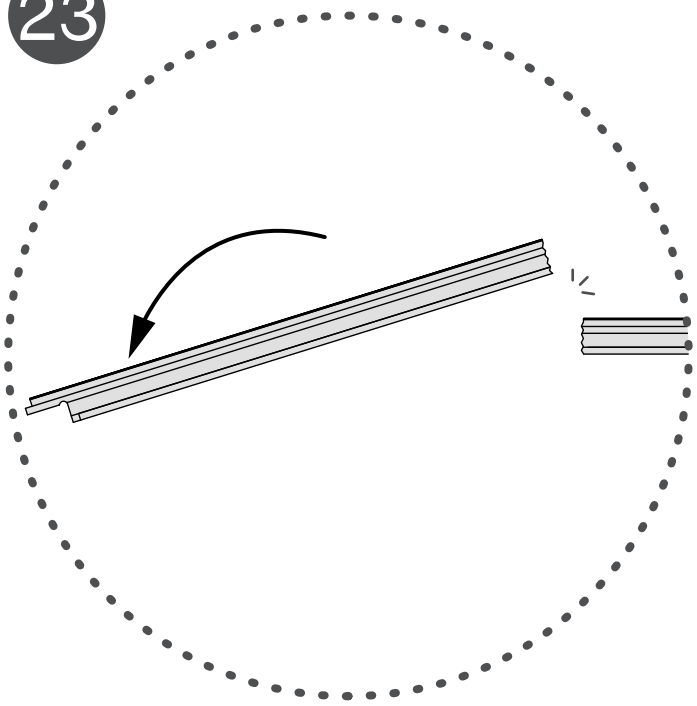

If you use a utility knife/cutter to cut the piece, use a square to guide the cut; three passes are sufficient to complete it.

Then, hold both ends of the material and use a lever-like motion to snap the piece apart (Illustration 23).

Tools

24

Illustration 24

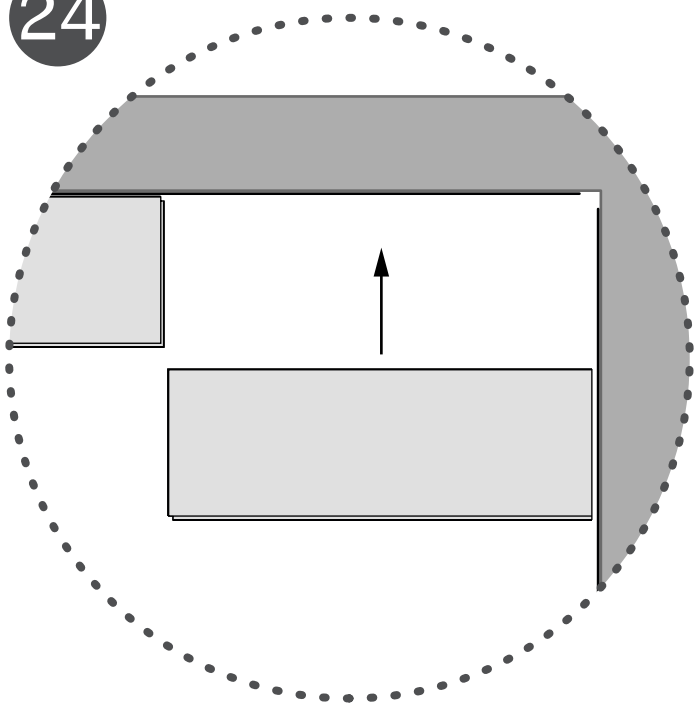

10. Once the cut is made, install the last piece by repeating Step 6 (Illustrations 24 & 25).

Remember to use the pieces as spacers to leave a 5–8 mm expansion gap between the wall and the piece.

Tools

25

Illustration 25

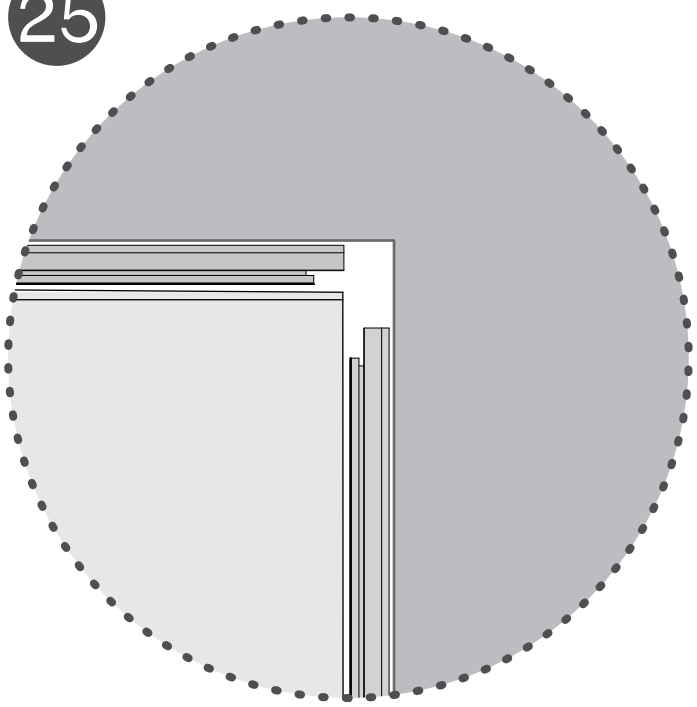

To begin installing the second row, you can use the leftover piece from cutting the last piece of the first row (Illustration 26).

11. FIRST PIECE IN THE SECOND ROW

Second Row

Position the first piece with the female locking edge facing the male locking edge of the piece in the first row (Illustration 27).

Use illustration 4 to identify each of the assembly edges.

Tools

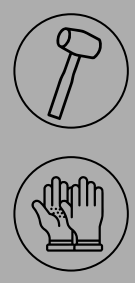

Remember to use the pieces as spacers to leave a 5–8 mm expansion gap between the wall and the piece.

26

Illustration 26

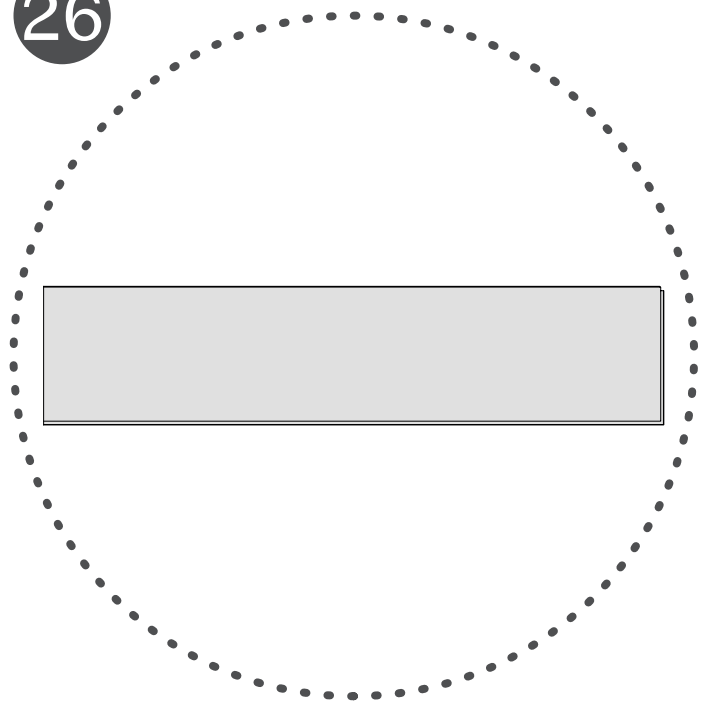

27

Illustration 27

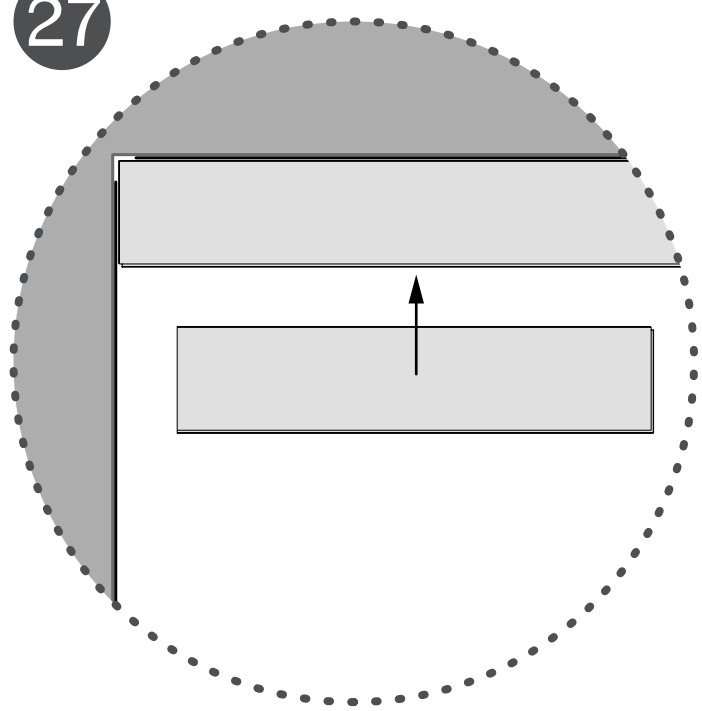

28

Illustration 28

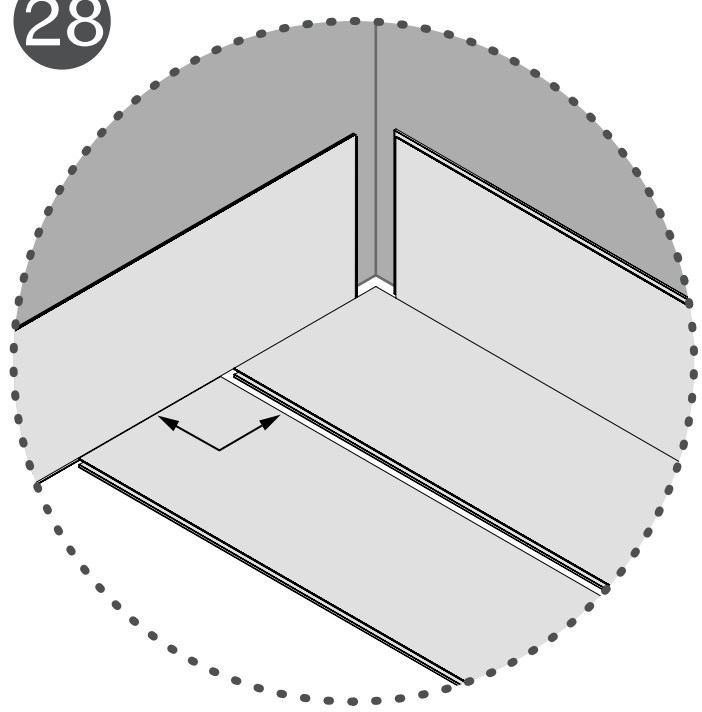

12. Use the clip system to secure the pieces. Snap the female locking edge into the male locking edge of the piece previously installed in the first row.

To ensure the clips are properly locked, lightly tap the joints with a rubber mallet.

Tools

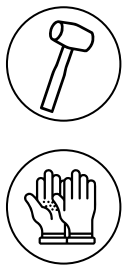

13. NEXT PIECE IN THE SECOND ROW

Place the next piece by positioning the female side lock toward the male side lock of the first piece in the second row, and the female locking edge toward the male locking edge of the first row, securing them together using the clip system (Illustrations 29 & 30).

Use Illustration 4 to identify each of the assembly edges.

To ensure the clips are properly locked, lightly tap the joints with a rubber mallet.

29

Illustration 29

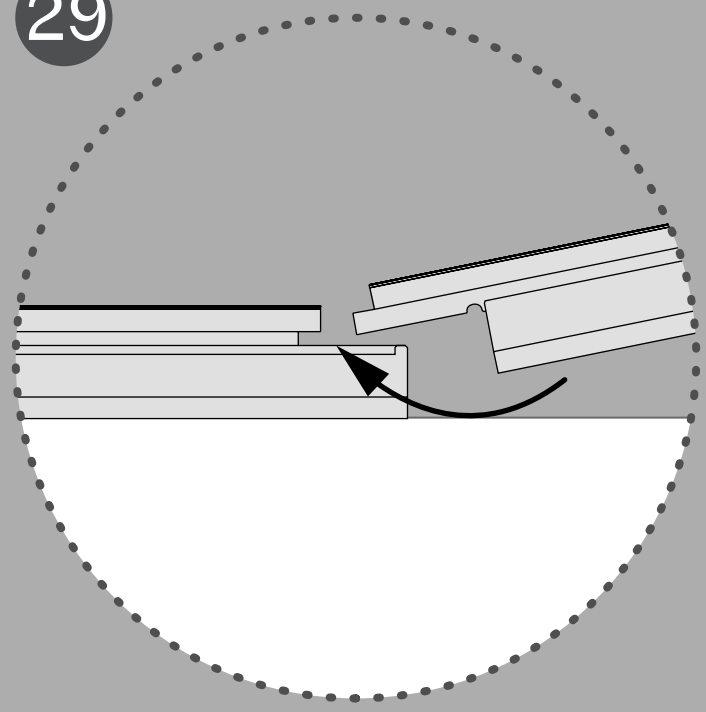

30

Illustration 30

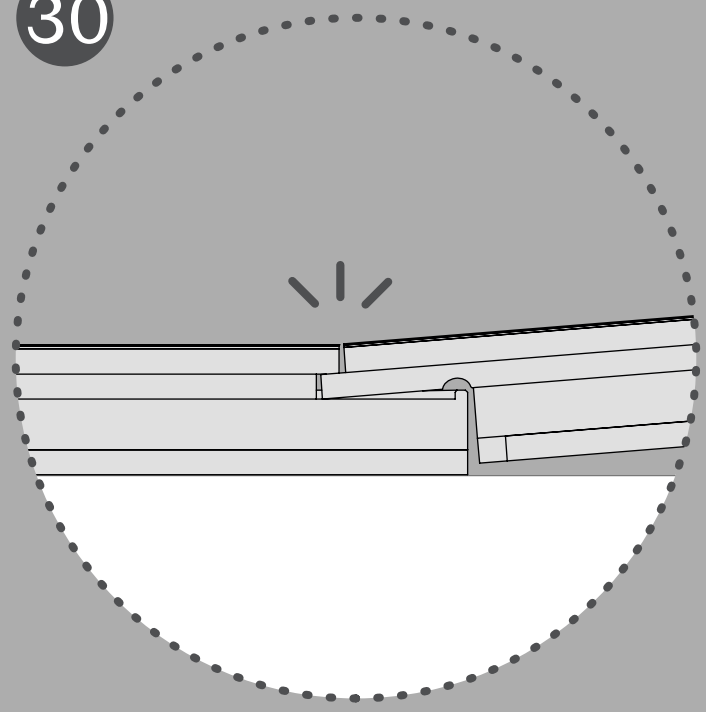

31

Illustration 31

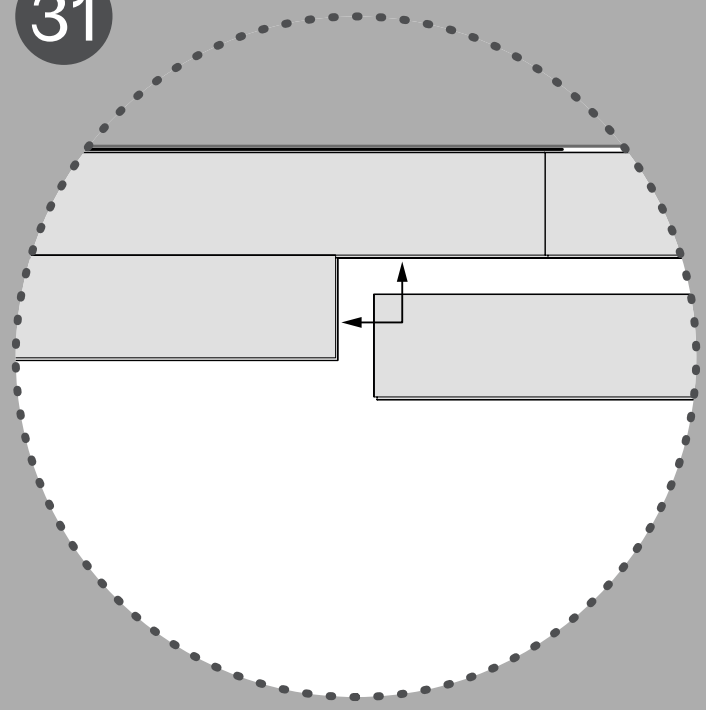

32

Illustration 32

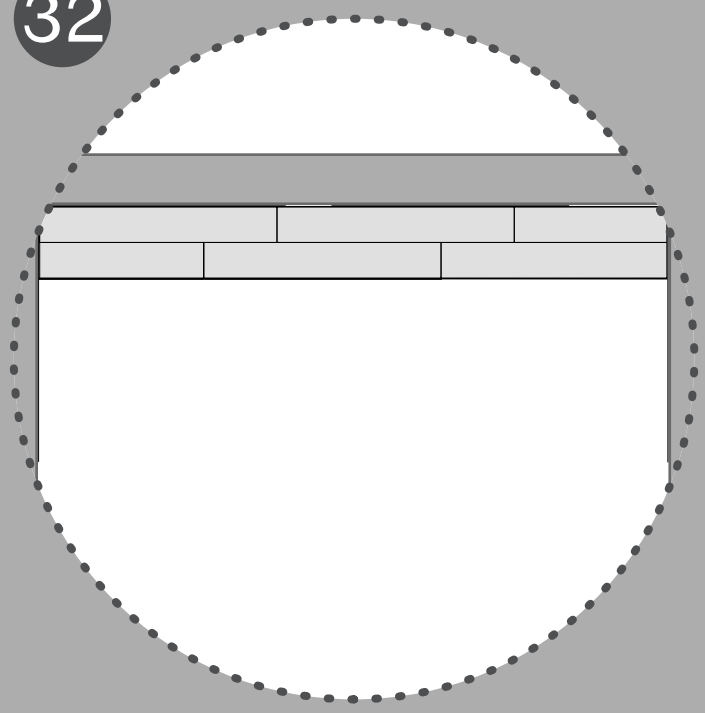

33

Illustration 33

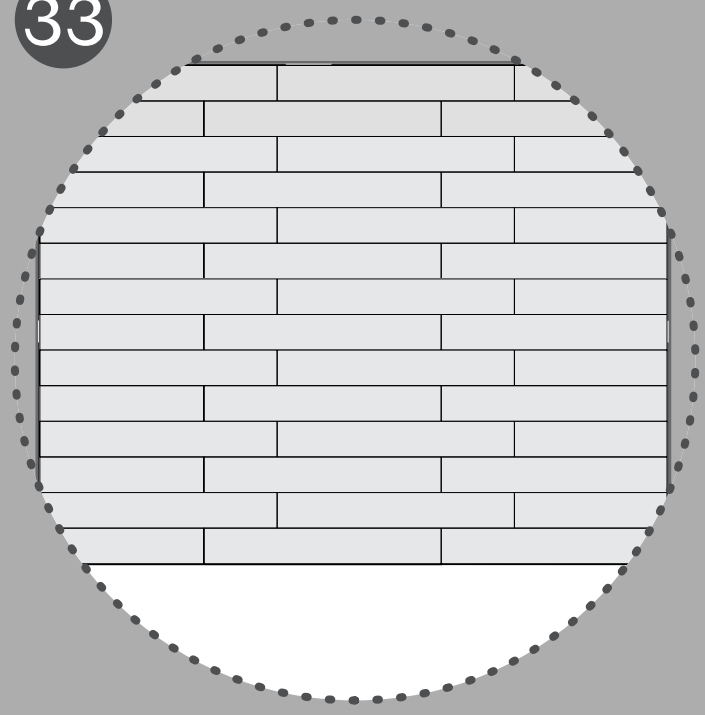

34

Illustration 34

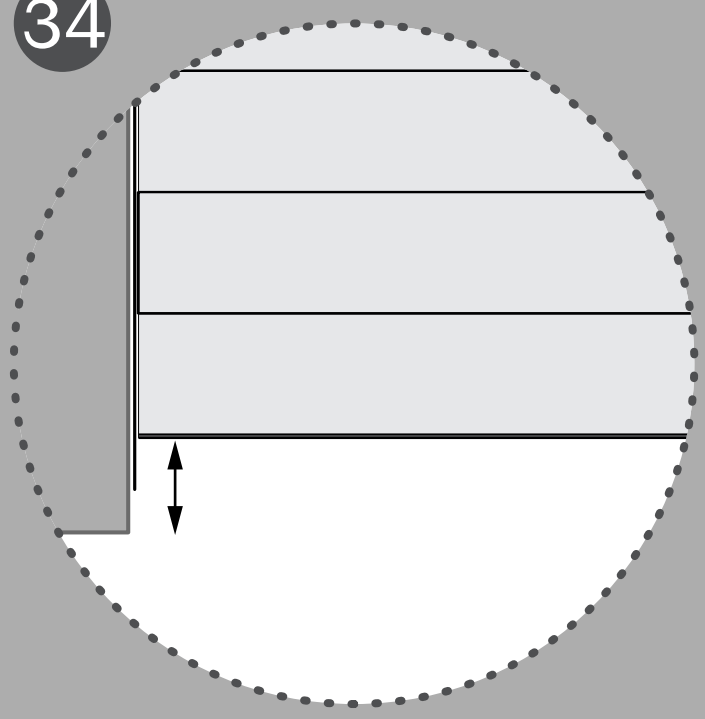

14. Repeat Step 13 to install the consecutive pieces, then return to Steps 8, 9, and 10 to install the last piece of the row.

15. Continue installing the pieces until the second-to-last row, repeating Steps 11, 12, 13, and 14.

Tools

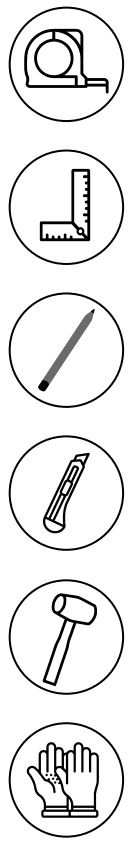

16. PREPARE THE LAST ROW

To install the pieces in the last row, follow the same procedure described in Steps 8, 9, and 10.

Measure and adjust the material

Using a tape measure or a tool of your choice, measure the required length of the last piece to be installed.

Tools

35

Illustration 35

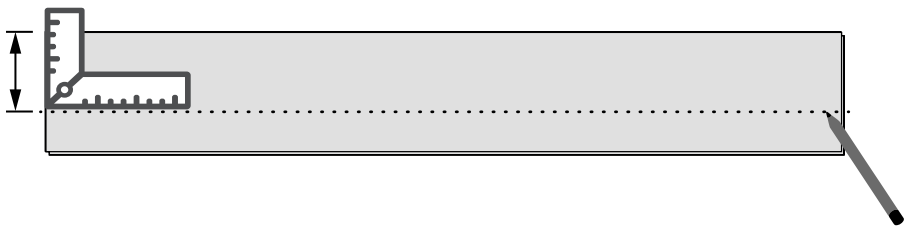

17. Using a pencil and a square, mark a line to serve as a guide for making the cut (Illustration 35).

Tools

36

Illustration 36

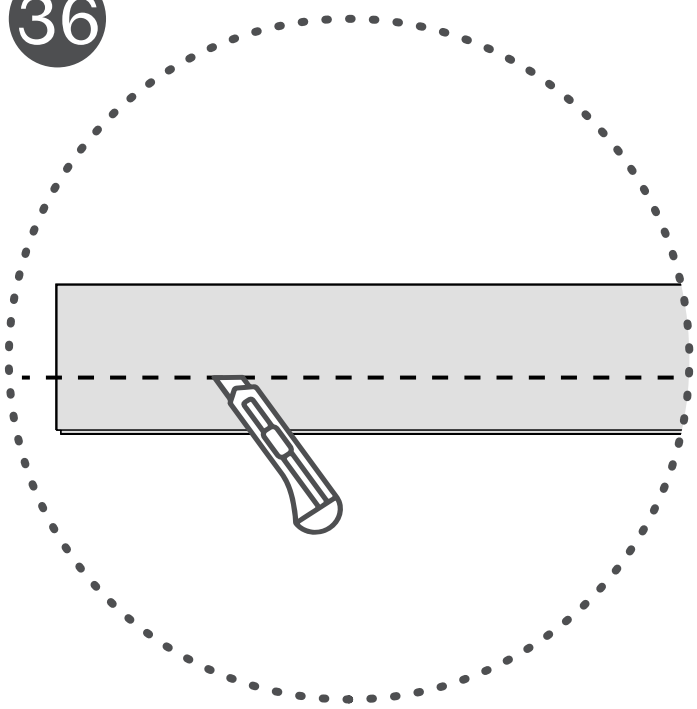

To make the cut correctly, the female locking edge should be considered the starting point when measuring the length of the piece (Illustration 36).

Use illustration 4 to identify each of the assembly edges.

If you use a utility knife/cutter to cut the piece, use a square to guide the cut; three passes are sufficient to complete it.

Then, hold both ends of the material and use a lever-like motion to snap the piece apart (Illustration 37).

Repeat steps 16 and 17 for all pieces in the last row.

37

Illustration 37

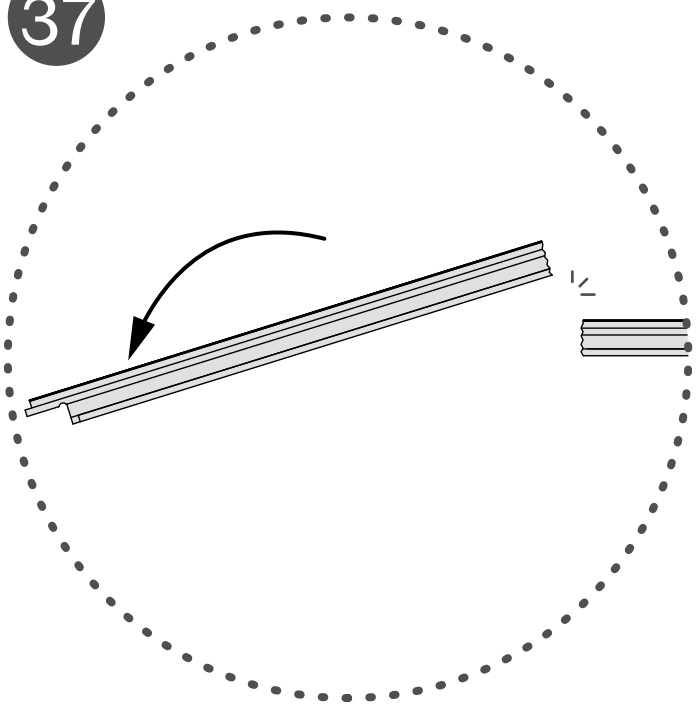

Tools

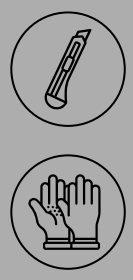

18. INSTALL THE LAST ROW

Repeat the procedure from Step 11, then return to Steps 8, 9, and 10 to install the last piece of the row.

Tools

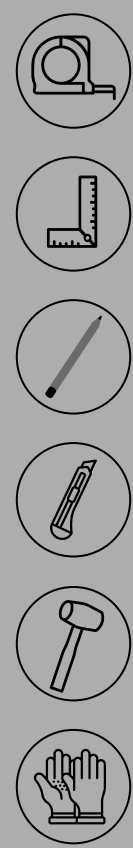

Illustration 38

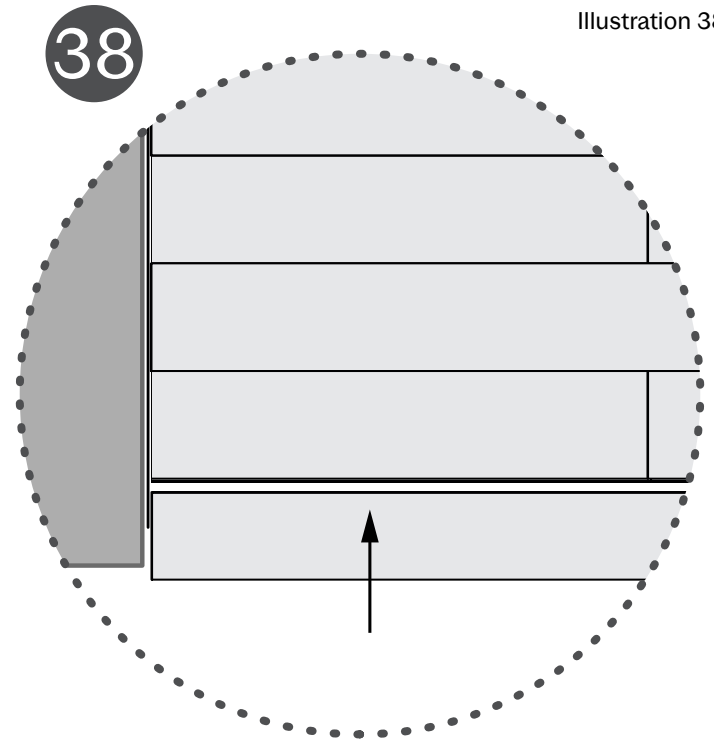

Illustration 39

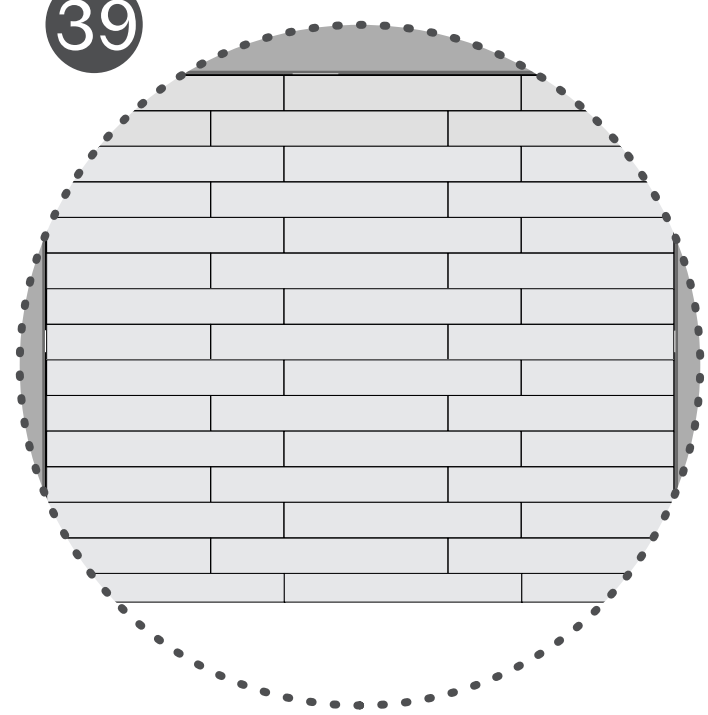

19.

Once the installation is complete, remove the pieces or spacers used around the perimeter of the area to allow for the expansion gap between the walls and the flooring (Illustration 40).

Illustration 40

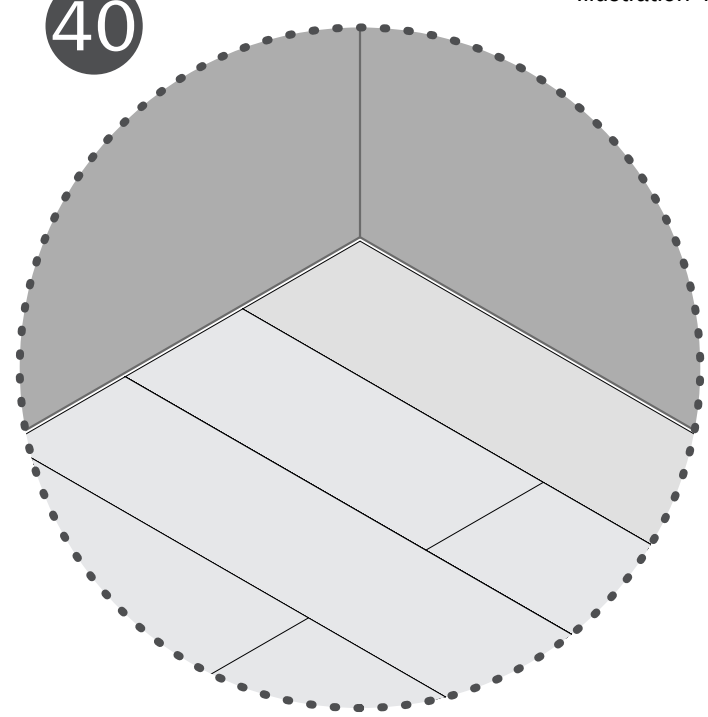

41

Illustration 41

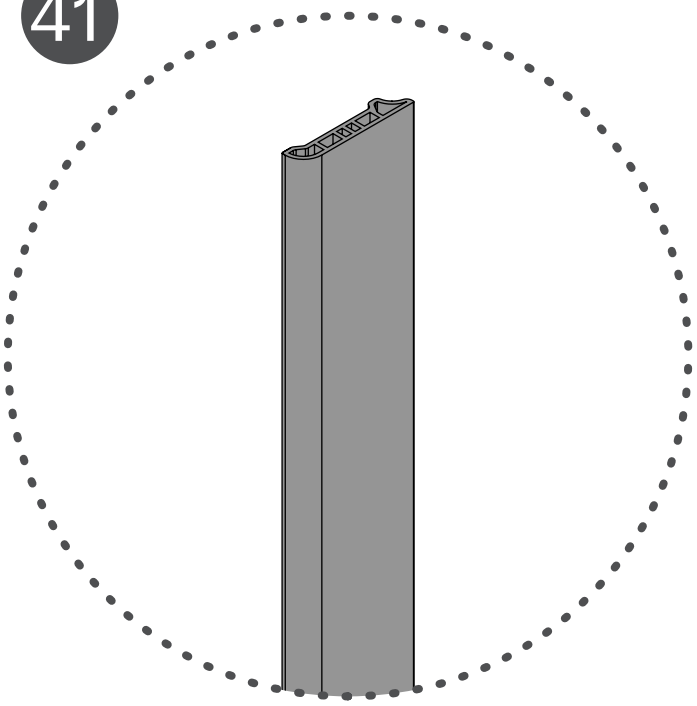

We recommend this option if your design requires it. Choose the option that best fits your needs and preferences.

20. LAMINATED WPC BASEBOARD INSTALLATION

The laminated WPC baseboard, also known as 'molding,' is a decorative element that complements the installation of stone plastic composite flooring.

42

Illustration 42

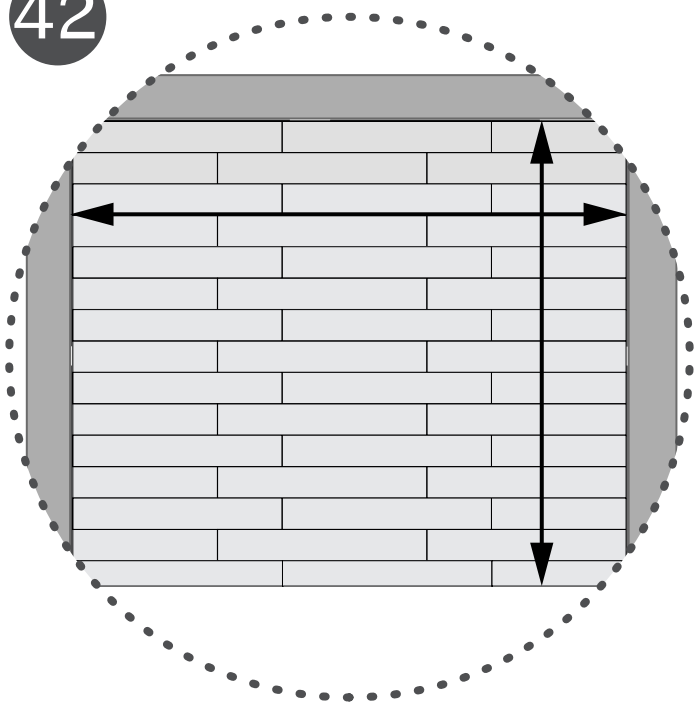

Using a tape measure or a tool of your choice, measure the length of the area where the laminated WPC baseboard will be installed.

Tools

21. After measuring the area, adjust the length of the material if necessary.

43

Illustration 43

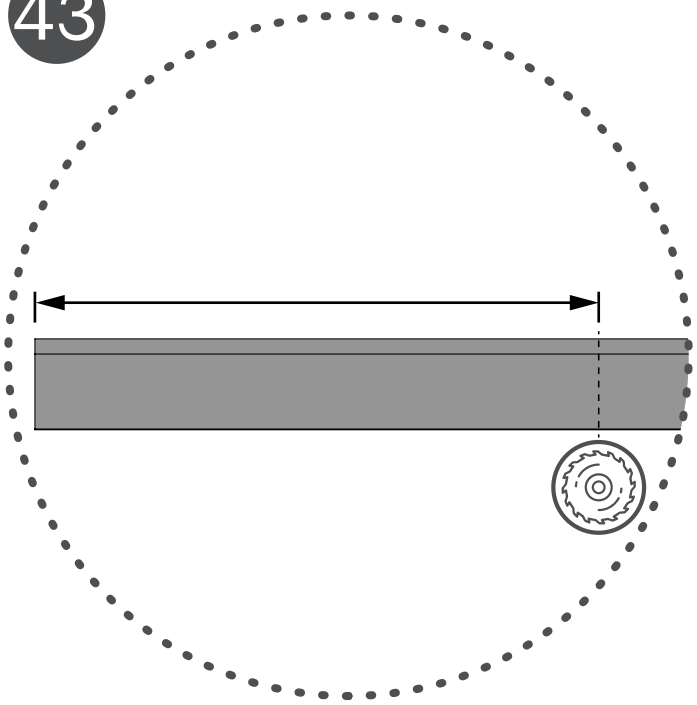

Recommended Cutting Tools:
- Wood Saw Blade, 75–100 teeth
- Handheld Router

Cutting Tools Not Recommended:
- Hand saw
- Coping saw

This step is optional, as the material adjustment varies depending on each client's project.

44

Illustration 44

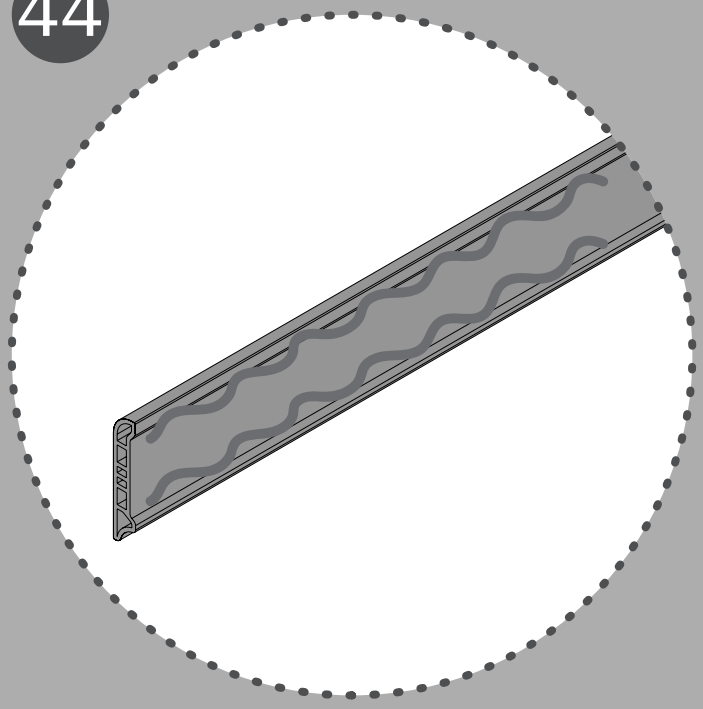

45

Illustration 45

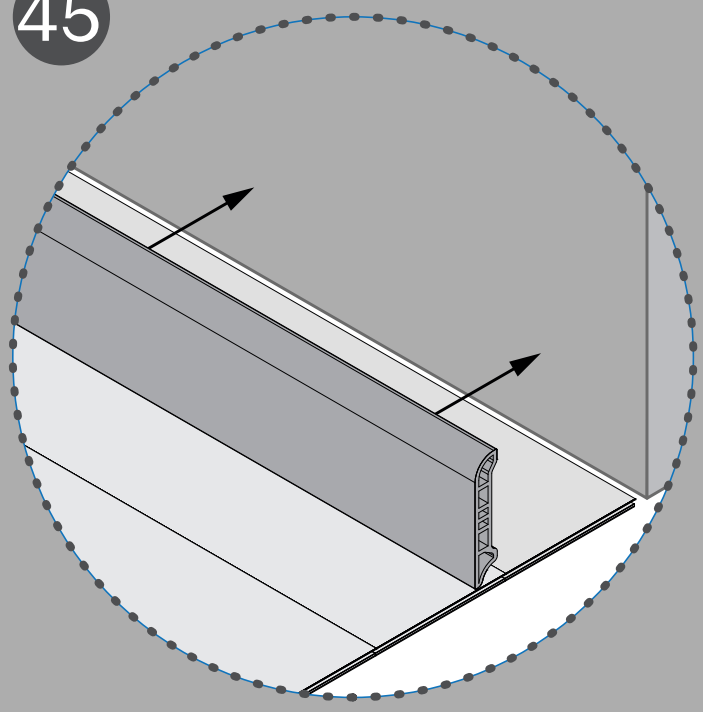

46

Illustration 46

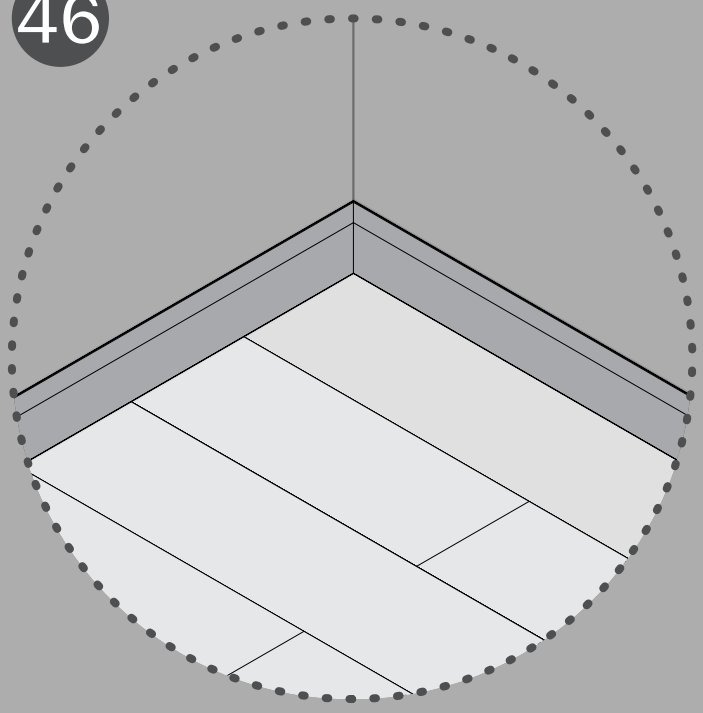

22. SECURE THE PIECE TO THE WALL

To attach it, apply adhesive to the back of the piece (Illustration 44).

It is recommended to follow the manufacturer's instructions for the mounting adhesive you choose.

Once the adhesive has been applied to the piece, position it in the desired location.

Tools

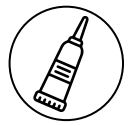

47

Illustration 47

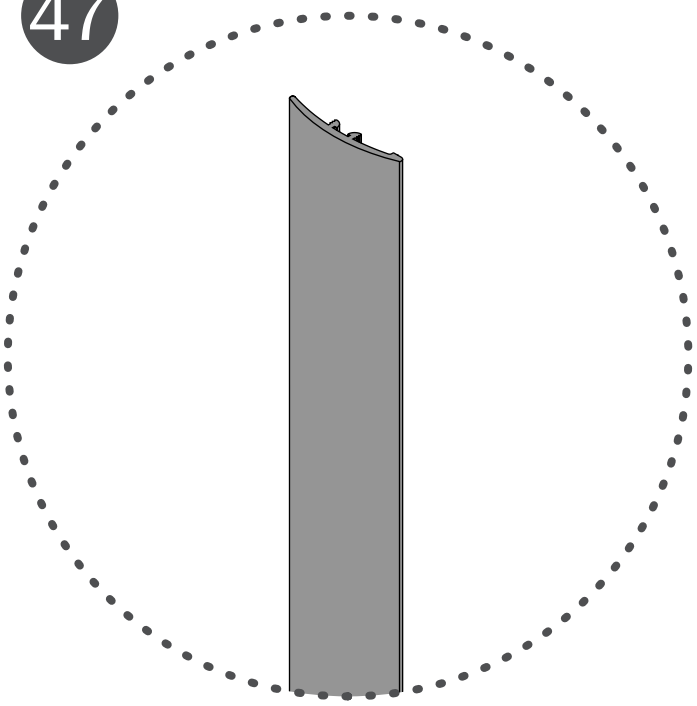

48

Illustration 48

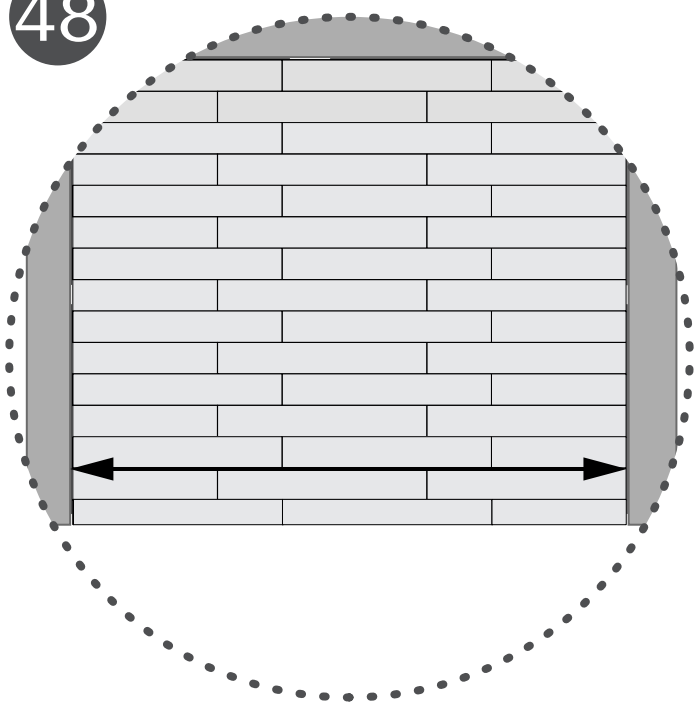

49

Illustration 49

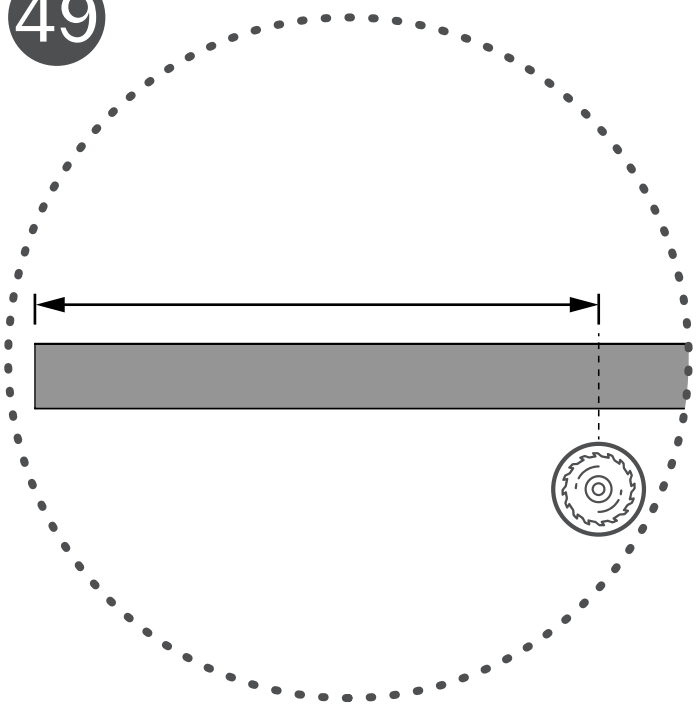

We recommend this option if your design requires it. Choose the option that best fits your needs and preferences.

23. TRANSITION PROFILE INSTALLATION

Transition profiles, also known as ‘finishing profiles,’ are decorative elements designed to cover the gap between two types of flooring and to complement the installation of stone plastic composite flooring.

Using a tape measure or a tool of your choice, measure the length of the area where the laminated WPC transition profile will be installed.

Tools

24. After measuring the area, adjust the length of the material if necessary.

Recommended Cutting Tools:
- Wood Saw Blade, 75–100 teeth
- Handheld Router

Cutting Tools Not Recommended:
- Hand saw
- Coping saw

This step is optional, as the material adjustment varies depending on each client’s project.

25. SECURE THE PIECE

To attach it, apply adhesive to the back of the piece (Illustration 50).

It is recommended to follow the manufacturer's instructions for the mounting adhesive you choose.

Once the adhesive has been applied to the piece, place it in the desired location.

Tools

50

Illustration 50

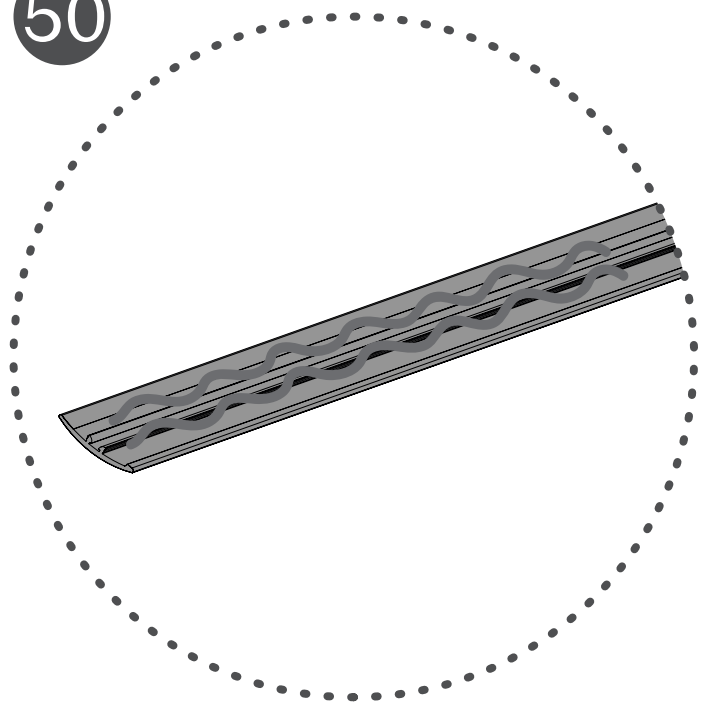

51

Illustration 51

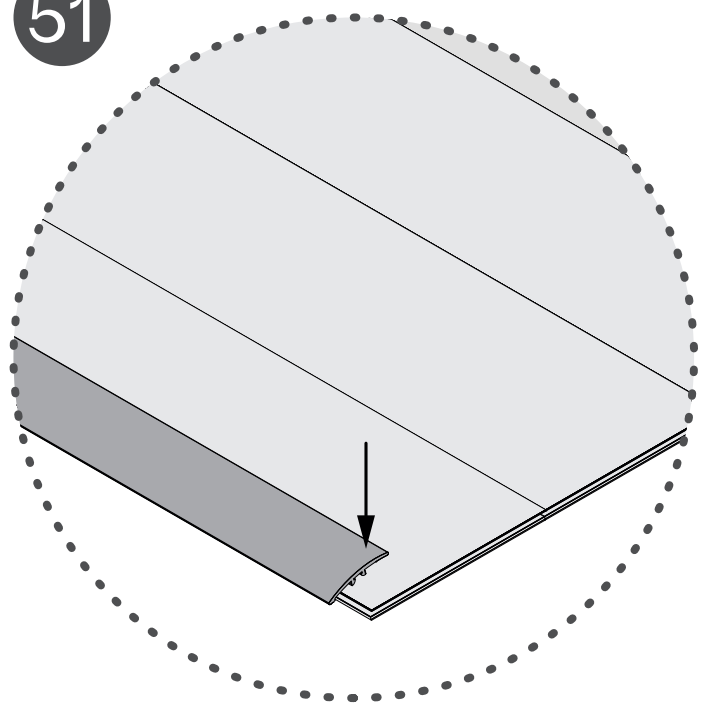

52

Illustration 52

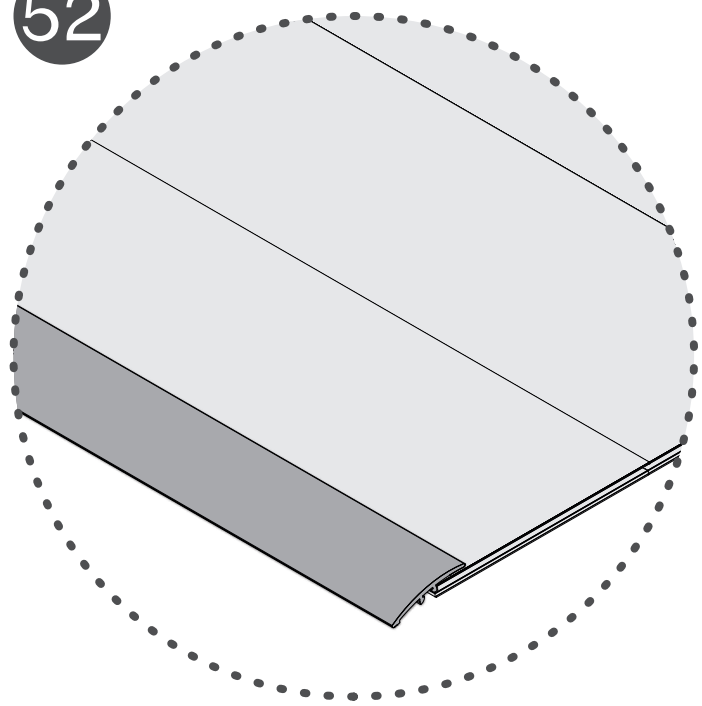

Decorate & enjoy your space...

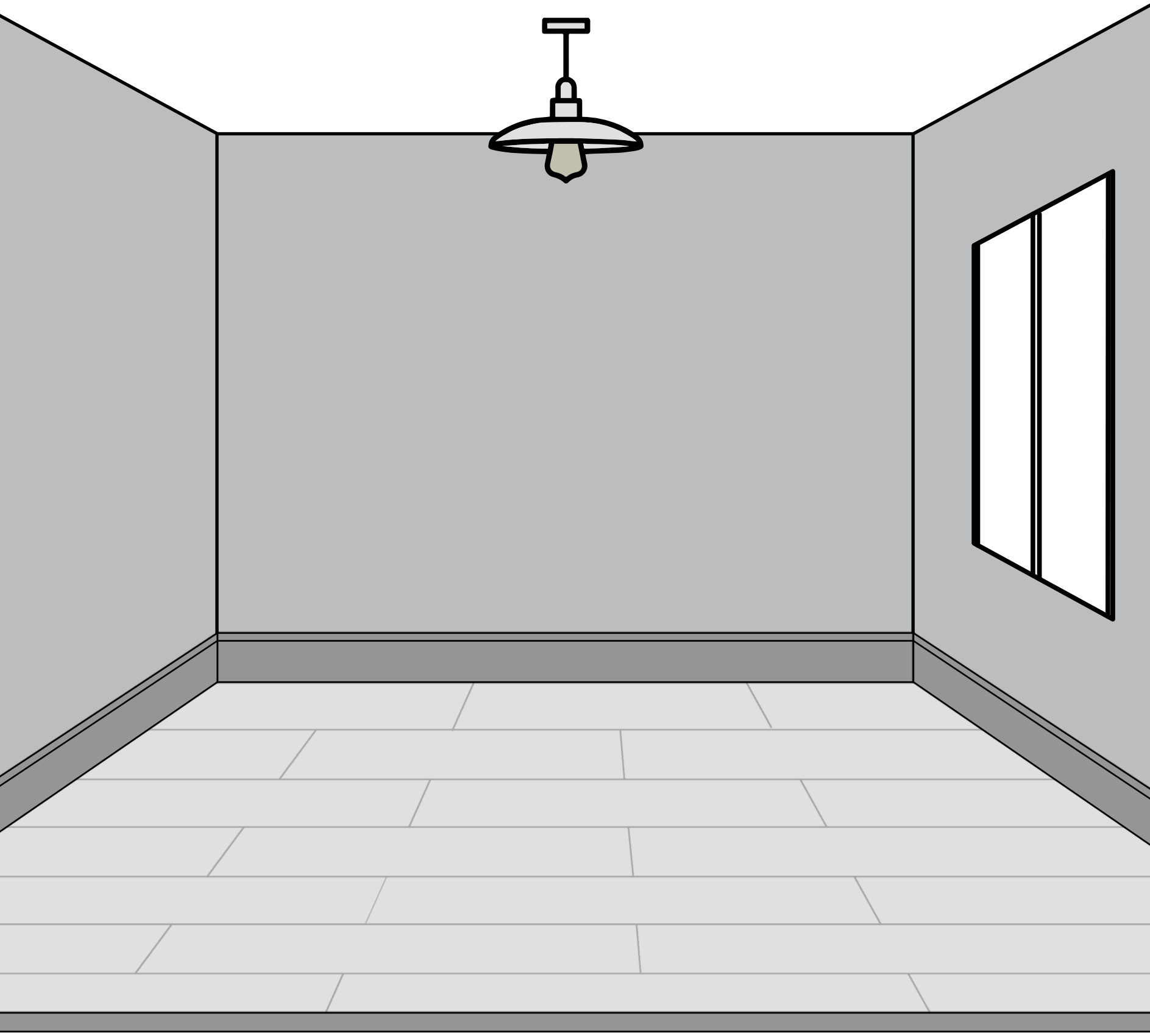

SARO TECH